INNOVATIVE
CLOSET DESIGNS
445 West Main Street, Suite 7
Wyckoff, NJ 07481
201-848-6355 / 201-322-3721 Fax
customerservice@icdnj.com www.icdnj.com

Estimate

Date	Estimate #
5/15/2025	23109

All material is guaranteed to be as specified. All work to be completed in a workmanlike manner according to standard practices. All agreements contingent upon strikes, accidents or delays beyond our control. Owner to carry fire, tornado and other necessary insurance. Our workers are fully covered by Workman's Compensation Insurance.

Authorized Signature _____ William B. Smith III

Name / Address

Montana Contracting
173 N Route 9W 845-664-2375 Ines
Congers, NY 10920 ines@montanacontracting
845-398-1778 O 201-290-0253 Kyle
Kyle@montanacontracting.com

Note: Pricing Is Valid for 30 Days From Date Of Estimate.

Existing Closet Material Must Be Removed Prior To Installation.

Please review all the information on this estimate. NON Returnable/NON Refundable Once Ordered. Lead-time on most orders as listed below from FINAL FIELD measurements - followed by signature and deposit if applicable.

5. W

TERMS	SALESPERSON	PROJECT	TAX STATUS
Net 30 Days	Don	MedicineCabinets / Delivered	NY8.375%

ITEM	DESCRIPTION	QTY/SF/LF...	PRICE	TOTAL
	Deliver To: 25 Stonewall Lane Mamaroneck, NY 10543 s.catalanotto@montanacontracting.com			
	Electrical Lighted Medicine Cabinets - Delivered Shared Bath #1 2 PC / Shared Bath #2 2 PC / Primary Bath 2 PC / Guest Bath 1 PC			
KOHLER	Kohler Verdera® 24" x 30" Lighted Medicine Cabinet K-99007-TLC / Each PC	7	1,099.99	7,699.93T
	Subtotal			7,699.93
Discount	Discount		-25.00%	-1,924.98
	Subtotal			5,774.95
medchestdi...	All Medicine Cabinets are Non Returnable/Non Refundable - See Specification Sheet for Rough Opening. ICD not responsible for any electrical work.		0.00	0.00T
	NY sales tax 8.375%		8.375%	483.65

ACCEPTANCE OF ESTIMATE-The above prices, specifications and conditions are satisfactory and are hereby accepted. You are authorized to do the work as specified. Payment will be made as outlined.
METHOD OF PAYMENT: ( ) Check ( ) Credit Card

TOTAL **$6,258.60**

DATE:_____ SIGNATURE:_____

By providing credit card information, the 50% deposit charge and final balance charge following installation are authorized. Prepay terms are paid in full.

☐☐☐☐ - ☐☐☐☐ - ☐☐☐☐ - ☐☐☐☐

Exp. Date ____/____ CVV ____

Address credit card bill is mailed to: _____

KOHLER®

Verdera®

24" x 30" lighted medicine cabinet

K-99007-TLC

Features

- Internal LED light guides provide optimally bright bathroom vanity lighting for grooming tasks
- Brightness at 2200 lumens ensures consistent lighting with no hot spots or dark spots. Produces 65 lumens per watt
- Approx. 3000 Kelvin light appearance delivers a neutral light ideal for overall bathroom aesthetics as well as tasks
- Minimum 90 CRI (color rendering index) lets you see yourself in the truest light for makeup application, grooming, and skin care
- Integrated LED bulbs have an estimated life expectancy of 59,000 hours
- Compatible with wall-mount LED dimmers (not included), which allow you to control lighting from multiple locations in the space
- Internal aluminum shelf has two electrical outlets for powering small devices such as toothbrushes and shavers
- Two adjustable tempered-glass shelves offer additional bathroom storage
- Front mirror, inside door mirror, and back panel mirror provide superior visibility
- 108° door swing with slow-close hinges

Material

- Anodized aluminum construction with a durable rustproof and chip-resistant finish

Installation

- Can be installed with left- or right-hand swing
- Includes mounting hardware for surface or recessed installation
- Side kits for surface-mount installation sold separately
- Hang-and-secure mounting system for easier surface-mount installation
- Recommend professional electrician installation

Required Products/Accessories

K-99012 30" mirrored side kit for medicine cabinet

Codes/Standards

UL 962
CSA C22.2 No. 0
CA Title 24 JA8
cUL Listed
UL Listed

KOHLER® One-Year Limited Warranty

See website for detailed warranty information.

KOHLER®

Verdera®

24" x 30" lighted medicine cabinet

K-99007-TLC

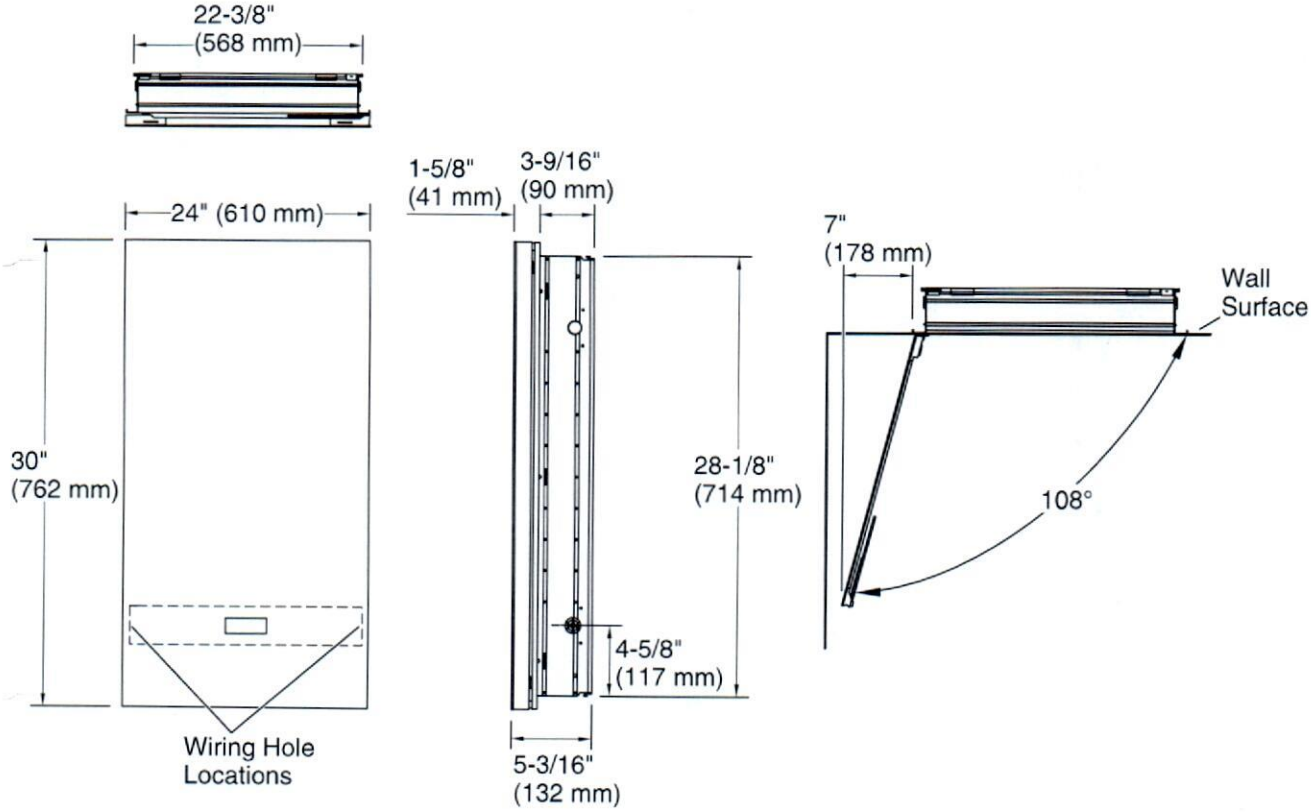

Required Electrical Service

One circuit required, protected with Class A Ground-Fault Circuit-Interrupter (GFCI). Outside North America, this device may be known as a Residual Current Device (RCD).

120 V, 15 A, 60 Hz

Technical Information

All product dimensions are nominal.

Lighting included: Yes

Notes

Install this product according to the installation instructions.

To recess mount, the wall cavity must be framed and the cabinet secured to framing studs. Reroute electrical or water supply lines from the cavity. Consult a professional if drain or vent piping is encountered, or if the wall is load-bearing.

To determine the height of the cabinet, ensure the door will clear all obstacles (such as a faucet). A minimum 3" (76 mm) distance is required.

A dimmer switch is required. This product is compatible with most residential dimmer switches intended for incandescent and dimmable LED bulbs.